DELTA COOLING TOWERS PVT. LTD.

# COOLING TOWER MOTOR

## INSTALLATION AND MAINTENANCE MANUAL

3 Phase
Totally Enclosed
Induction Motor

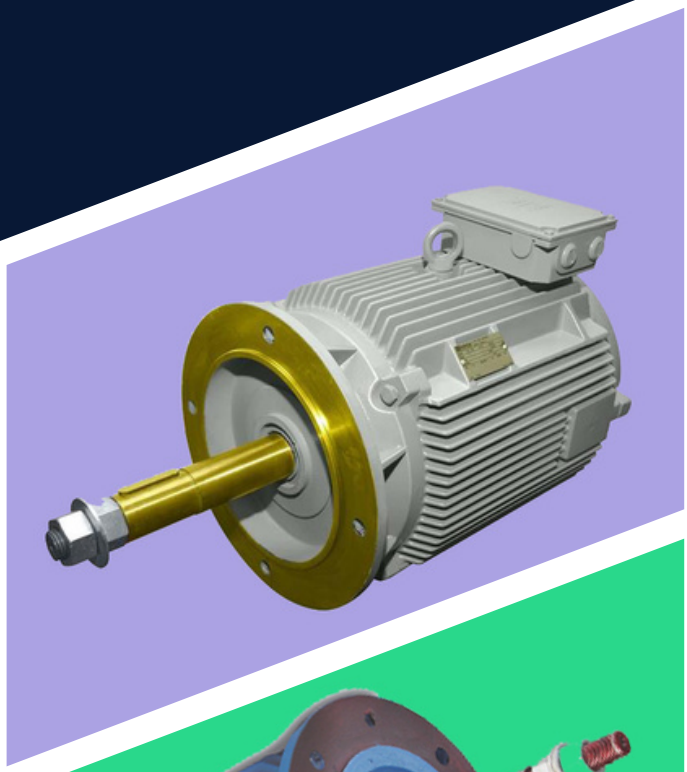

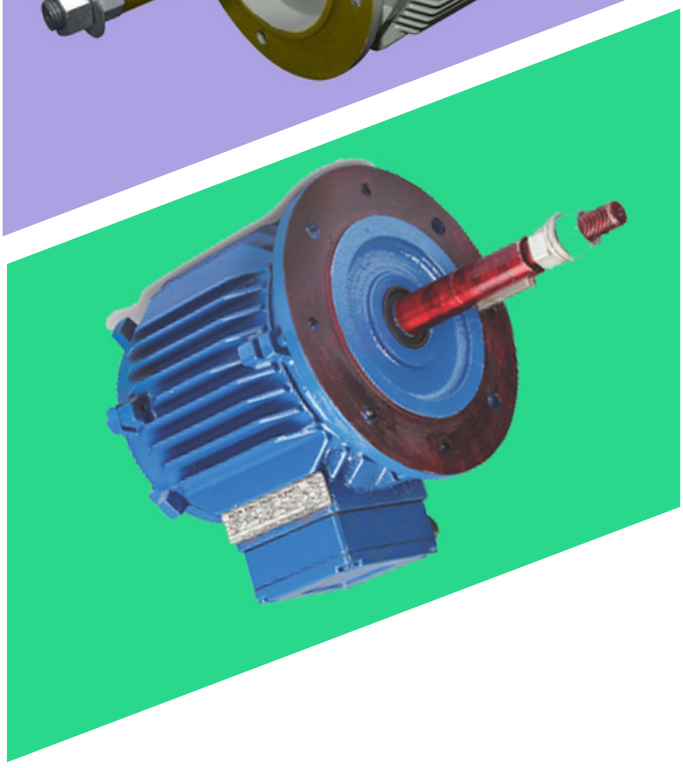

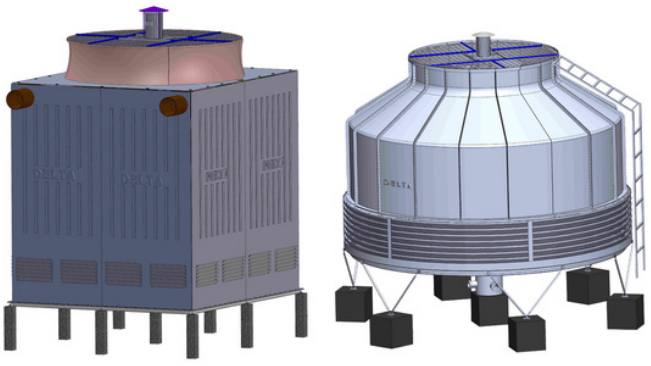

deltacoolingtowers.in
Email: delta@deltactowers.com
Toll Free (India): 1800 11 11 17
Helpline (India/International: +919811156630

# Overview

At Delta, We always procure the best components for the cooling towers that we manufacture. These bought-out components are selected based on the reputation of the component manufacturers. The motors used in our cooling towers are special-duty motors designed for continuous operation in critical and tropical conditions. These motors are specifically designed and manufactured for cooling tower applications. We also provide installation and maintenance instructions for these motors.

***Here, we provide the installation and maintenance instructions for these motors***

# Installation and Maintenance of Cooling Tower Motors

## Receiving and Storing

- Motors when received should be checked for any damage during transit. If there is any damage, the same should be reported to our Works/Office/Service rep.
- Check for damage to lifting equipment/fixtures.
- After receiving the correct motor, store the motor in clean dry place if it is not to be installed and used immediately.
- Energize space heaters to help prevent condensation within the motor enclosure. Space heaters are supplied at additional cost. They do not come with the motor default.

# Installation and Mounting

- Rotate the shaft by hand to check if the motor rotates freely.
- Replace the Bearing (for ZZ bearing) if the motor has been in storage for more than 18 months.
- Check the insulation resistance both-between phases and phases to earth by the means of a 500 volts megger. If the insulation resistance in less than 10 mega ohms, it indicates the presence of moisture inside the motor. Dry out the motor till the insulation resistance increases above 10 mega ohms before being put into service.
- Please use the above method to check insulation of the motor before starting the motor in all cases where the motor was subject to storage for a long time, especially in the case of the motor weighing more than 200 Kg and at locations with a humid atmosphere.
- To remove the anticorrosion coating on the shaft, use petrol, white spirit or kerosene. Do not scrap the coating off.
- See that the machined surface of the motor and the mounting surface of the motor is level and clean to avoid vibration and maintain alignment of the shaft and the load.
- The coupling part to be fitted on the motor shaft are to be properly balanced. The bore and the keyway and to be machine accurately.
- The coupling parts or Hub (for Cooling Tower) must be fitted gently. Hammering must be avoided since it might be damage bearings and shaft
- While using non-flexible coupling it should be noted that the shafts of the motor and driven machine must be in perfect alignment and axes should coincide.
- The motor should be installed such that it has easy and free access to cooling air and can pass unobstructed over the motor.
- Do not cover the motor with any type of covering as it can lead to overheating and subsequently motor failure.

# Electrical Connections

- Use appropriate cable size for electrical connections.
- Usage of Starting panel, starting apparatus which ensures safety to the motor while single phasing or overloading to avoid motor failure.
- The supply voltage should be the same as given in the rating plate.
- Connect the motor in accordance with the connection (Star or Delta) given in the rated plate and connection diagram given inside the terminal box cover.
- Connect the earthing terminal properly for protection. This ensures safety. Local electrical code must be followed.
- While connecting the cables to motor terminals please ensure that the cable is properly secured and clamped, and it does not exert any tension on the terminal. A heavy load or tension by the cable can break the terminals.
- Motors must be installed as per the local electrical code/regulation by licensed/authorized personnel. Motors must be protected against overload and short circuit conditions with appropriate overload relay.

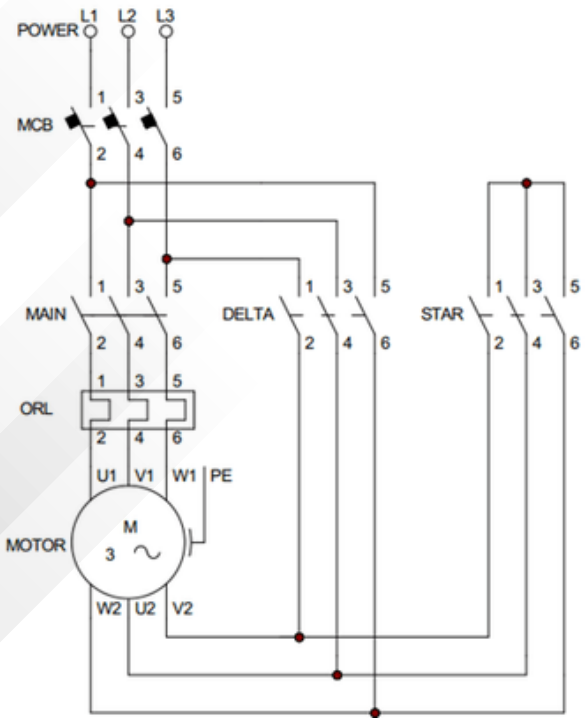


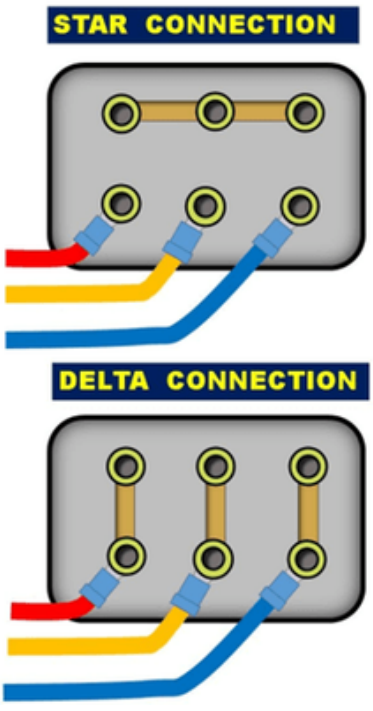

# Special installation instructions for IP55/IP56 construction motors

- Conduit entries are fitted with threaded plugs and are sealed. Open the plug and clean threads before fitting cable gland. Use double compression gland and seal the threads of glands with sealing cement. This will ensure that IP55/IP56 protection of the cable entry.
- After the cable connection is done in the terminal box properly, ensure that the rubber gasket provided is not dislocated or distorted and fixing screws are properly tightened.
- The motor shaft is provided with oil seals on both ends.
- While replacing oil seals make sure that oil seals are not distorted, the springs are in their position and the lip of the oil seal is free. Apply small amount of grease to the lip.
- Whenever the motor is opened and reassembled ensure that all joint faces are properly cleaned, and gasket cement is applied properly at all joints.





